7 GPM PUMP SERIES	DIMENSION "A" COMPRESSED	DIMENSION "A" FULLY EXTENDED	DIMENSION "B"	DIMENSION "C"
1/2oz. – 2oz.	12.125	13.000	4.750	3.625
4oz.	12.250	14.000	4.750	4.625
8oz.	13.500	15.000	6.000	4.813
12oz. – 26oz.	13.750	15.500	6.188	6.875
32oz.	15.000	16.750	7.500	6.500
47oz.	15.500	17.000	7.625	6.750

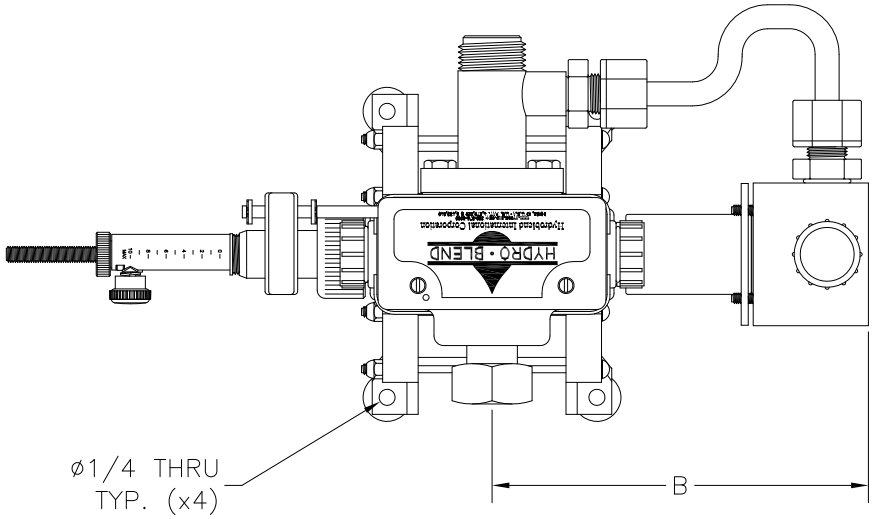

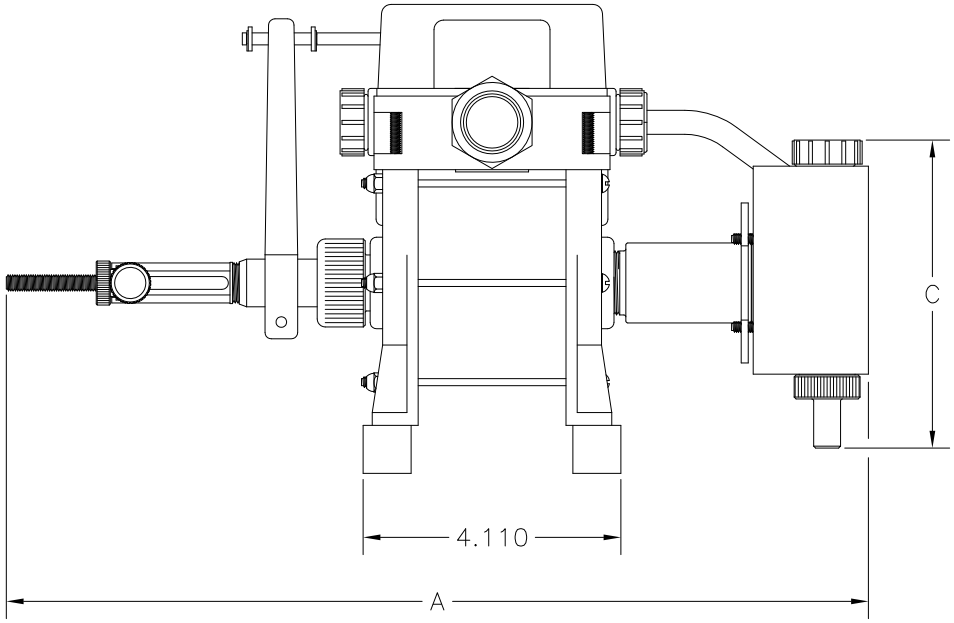

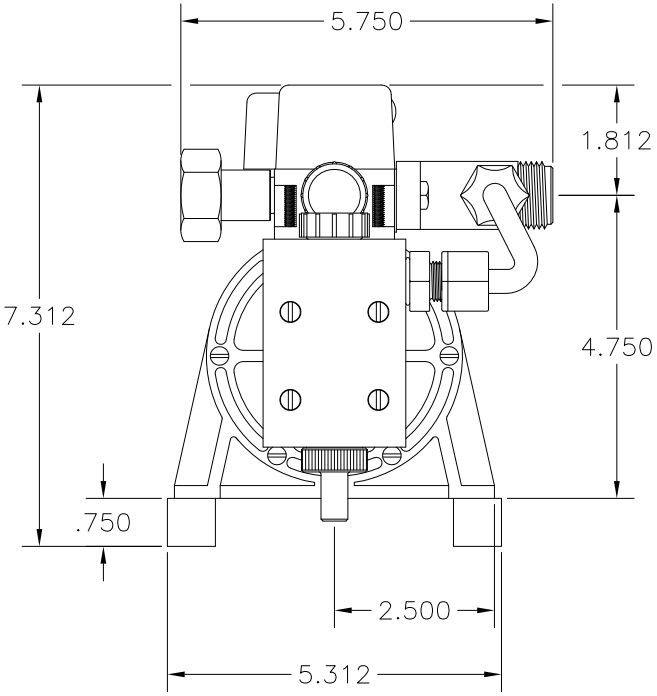

REVISION:

(A) ALL DIMENSIONS UPDATED, 05/18/98.

(B) ALL DIMENSIONS UPDATED WITH PUMP IN OVER STROKE POSISTION, 01/26/01.

NOTES:

1. REDRAWN, 09/19/07.
2. ALL DIMENSIONS ±.125.
3. DIMENSION "A" IS TAKEN WITH ADJUSTMENT SET TO MAXIMUM, SEE CHART ABOVE.

C:\AUTOCAD\CROWN\Paper-Work\Dimension-Prints\7gpm-Dimension-Print.dwg

SCALE:	SHEET:	DATE:
1:3	1 of 1	04/17/98
DRAWN BY: SC	CHECKED BY: DK	
SERIES: 7 GPM	DESCRIPTION:	
REVISION: B	REVISED BY: SC	DATE: 11/26/08

HYDRO • BLEND®
5301 SAWYER AVENUE BOISE, ID 83714
PHONE: (208) 375-5000 www.hydroblend.com

PART NUMBER:

7gpm. HORIZONTAL MOUNT PUMP DIMENSIONS